DRAWING NUMBER
12-460-194
NPI OR ECN NO
ECN H000045

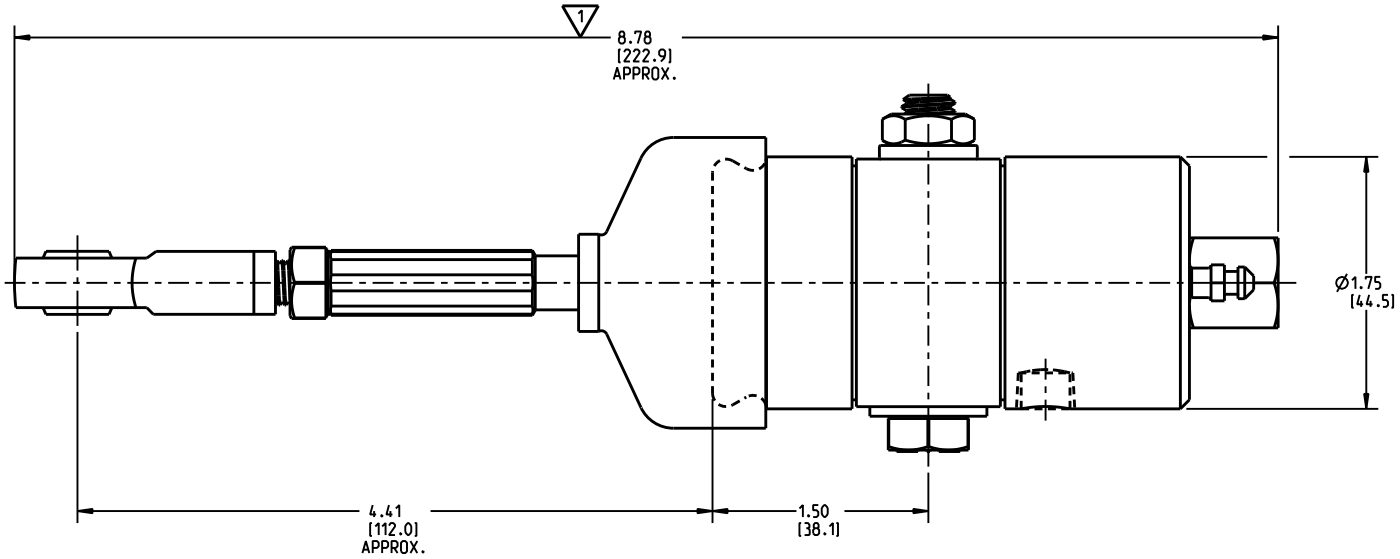

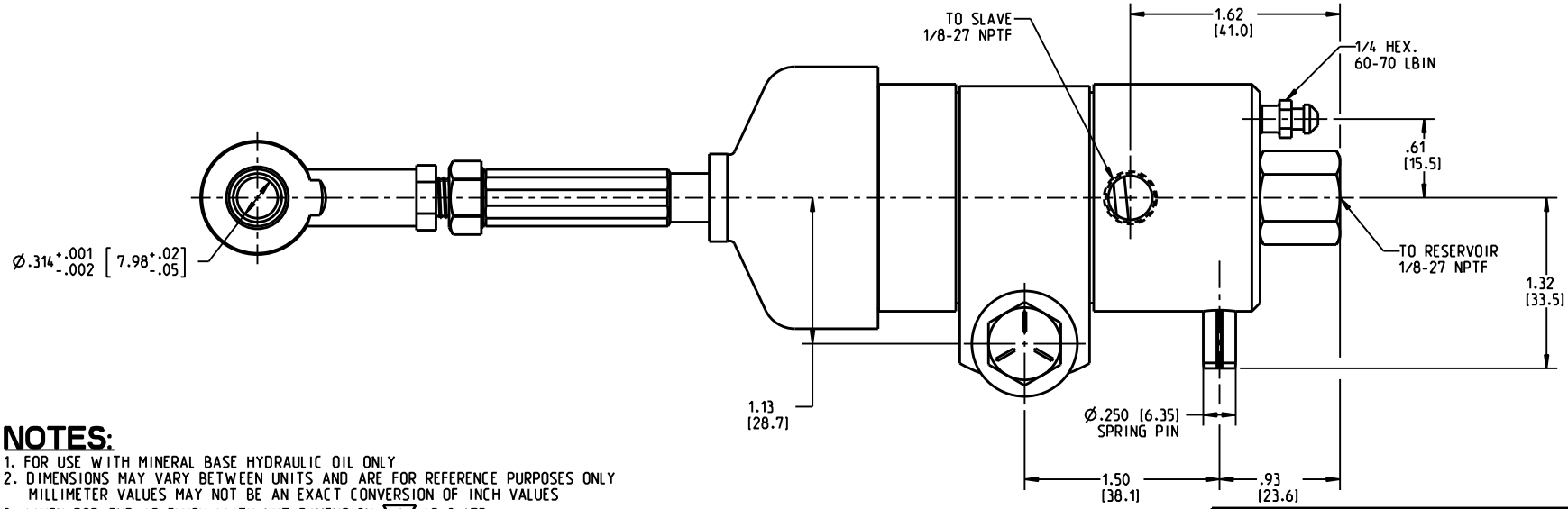

NOTES:

1. FOR USE WITH MINERAL BASE HYDRAULIC OIL ONLY
2. DIMENSIONS MAY VARY BETWEEN UNITS AND ARE FOR REFERENCE PURPOSES ONLY MILLIMETER VALUES MAY NOT BE AN EXACT CONVERSION OF INCH VALUES
3. WHEN ROD END IS FLUSH WITH NUT DIMENSION 1 IS 8.675
4. REPAIR KIT P/N 12-400-002
5. ACTUATOR ASS'Y P/N 12-460-188

PERFORMANCE CHARACTERISTICS:

1. DISPLACEMENT: .727 CUIN

INCH
[MILLIMETER]

MICO®
North Mankato, Minnesota USA

SCALE	TITLE			
0.750	ACTUATOR ASSEMBLY			
DWN RGBS1 2010-07-09	APVD PROD ENGRG PJS 2010-07-26	SIZE	DRAWING NUMBER	REV
X NO	APVD ENGRG BSW 2010-07-20	A	12-460-194 CUSTOMER COPY	C

COMPONENT AND SYSTEM RECOMMENDATIONS MADE BY MICO, INC ARE BASED ON INFORMATION SUPPLIED BY POTENTIAL USER AND/OR SYSTEM DESIGNER. THE POTENTIAL USER AND/OR DESIGNER MUST MAKE FINAL ACCEPTANCE AND APPROVAL OF COMPONENTS AND SYSTEM AFTER TESTING PERFORMANCE ON AN ACTUAL APPLICATION FOR WHICH SYSTEM WAS DESIGNED.

MICO, INC CLAIMS PROPRIETARY RIGHTS TO THE MATERIAL DISCLOSED IN THIS DOCUMENT. THIS DOCUMENT IS PROVIDED IN CONFIDENCE AND MAY NOT BE REPRODUCED OR DISCLOSED WITHOUT WRITTEN PERMISSION FROM MICO, INC. COPYRIGHT MICO, INC. ALL RIGHTS RESERVED.